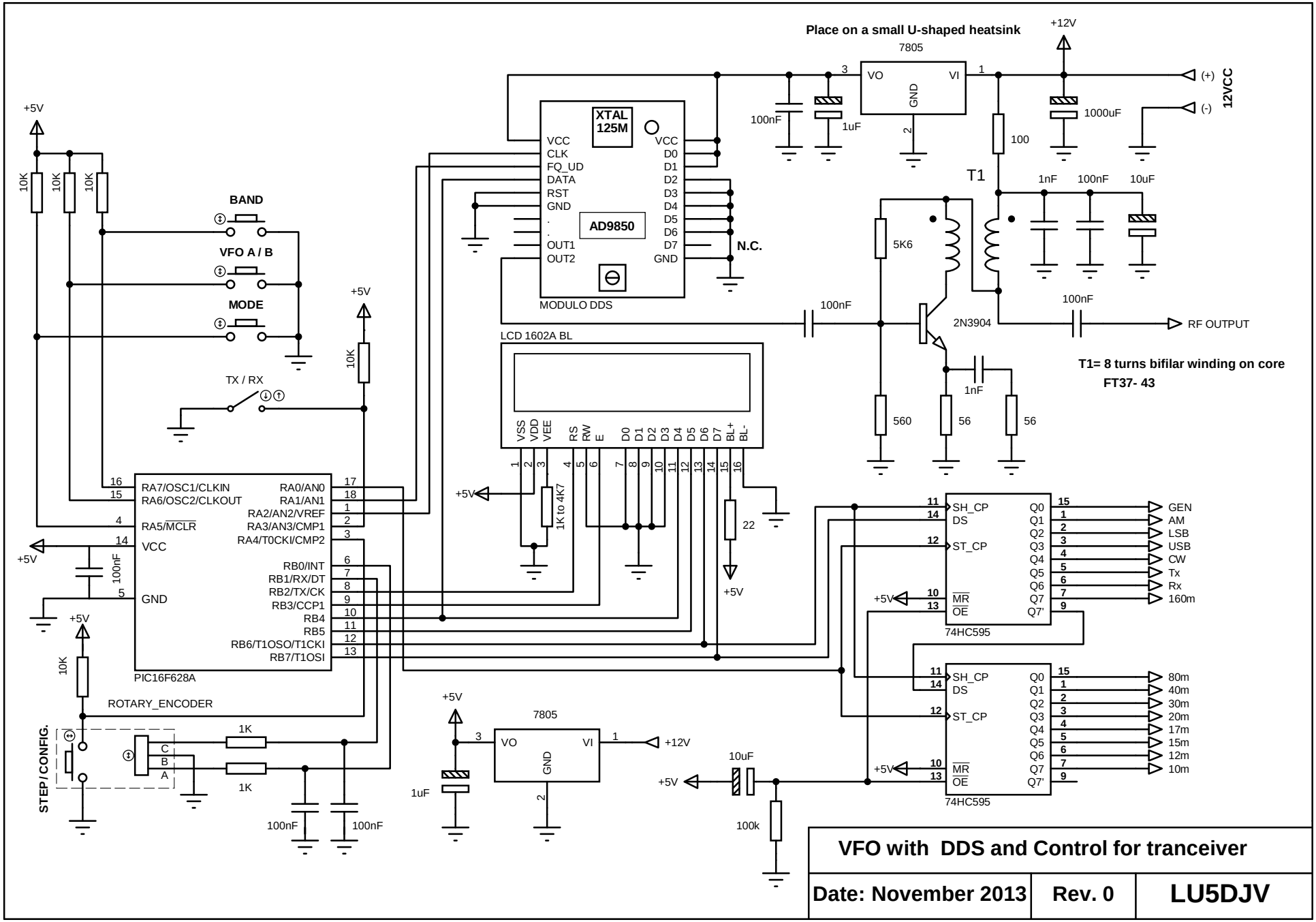

VFO with DDS and Control for tranceiver		
Date: November 2013	Rev. 0	LU5DJV