IDEAS FROM ABROAD

TRANSLATED AND EDITED BY ERWIN DAVID, G4LQI

A home-made **tri-band HF beam** that worked first time was designed by **Henno Schotten, DJ1FO** and described in *CQ-DL* 2/94.

AN INTERESTING FORM of two-element Yagi, the mono-X-beam, appeared as an 'Antenna Project' in the 1991 *ARRL Handbook*. **Fig 1** shows its construction. Four aluminium tubes are mounted X-wise on a square centre board. Two adjacent tubes make the director, the other two the radiator. An end-loading wire is connected to the tip of each tube to tune each element to its desired frequency.

This X-beam is said to have a gain of >6dBi and an F/B ratio of 18dB. The feed-point resistance is near 50Ω. [Computer analysis of a single band X-beam by RSGB HQ showed that the above claim on gain and front-to-back to be broadly true, however two large side lobes were shown only 4dB down from the main lobe –*Ed*]

MY 10-15-20M VERSION

FEATURES OF MY TRI-BAND X-beam are:

- Turning radius only 3.30m.
- 4-way symmetry, hence no wind torque on the rotor.
- No expensive capacitors required for the traps.
- Tuning without interaction between bands.
- Only a dip meter and an SWR indicator are required for tuning.

CONSTRUCTION

THE X CONSISTS OF FOUR identical arms. Each is made up of three lengths of 25mm OD x 22mm ID aluminium tubing, spliced end to end with 22mm D nylon rods.

These rods are 230mm long, of which 100mm is inserted into each tubing end; this leaves 30mm insulating gaps which are then bridged by traps. **Fig 2.** Stainless bolts through the tube ends and the nylon rods secure the assembly and provide connections for the traps.

The four arms are assembled on a centre-board made of tufnol measuring 400 x 400 x 10mm. Two 2-bolt pipe clamps and stainless steel hardware hold each arm to the board, which, in turn, may be attached to the rotor or stubmast in any convenient manner. A light plastic line connects the tips of the four arms to keep them from swaying sideways.

The end loading wires are made of 2.5mm² finely-stranded PVC-insulated copper, eg split hi-fi speaker cable. The 14MHz wires connect to the tips of the arms; the 21 and 28MHz wires to the centre-side bolts of the 21 and 28MHz traps, resp.

Plastic choc-block inserts, tightened onto the ends of the loading wires, serve as attachment points for strings which draw each loading wire towards its opposite number; a spring, actually a 13mm wide elastic band cut from a car tyre inner tube, tensions each such string.

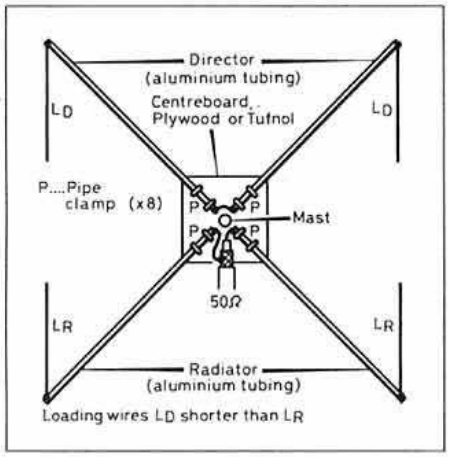

Fig 1: Top view of the single-band X-beam from the *ARRL Handbook*.

THE TRAPS

COILS OF RG58C/U COAXIAL CABLE serve as complete tuned circuits. The outside of the braid acts as the inductor; the capacity between the centre conductor and the inside of the braid makes a high-voltage high-current capacitor which appears in parallel with the inductance if connected as in **Fig 3**. These traps are OK up to 300W.

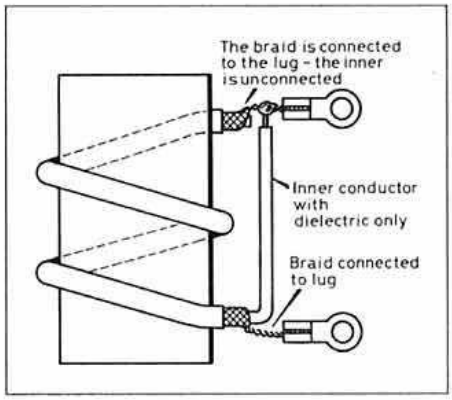

Fig 3: Traps without a discrete capacitor are easy to make and adjust. Four turns of RG58C/U tune to 28.5MHz; five turns to 21.1MHz. Weatherproofing is required.

All eight traps use identical formers made of 40mm outside diameter PVC plumbing tubing as shown in **Fig 4**. Four turns are required for 28.5MHz and five turns for 21.1MHz. The exact frequency, as measured with a dip meter, is set by squeezing or spreading the turns, which are then fixed in place with UHU-plus cement*.

The traps cannot be wound on the insulating rods used to splice the tubing sections as then the ends of the latter would couple to the traps as shorted turns. Therefore, the traps were offset above the insulating rods and tied to them with soft nylon ribbon.

ADJUSTMENT

TO START WITH, ALL 12 loading wires are made longer than my adjusted lengths shown in Fig 2 (say 150mm longer for 28MHz, 225mm

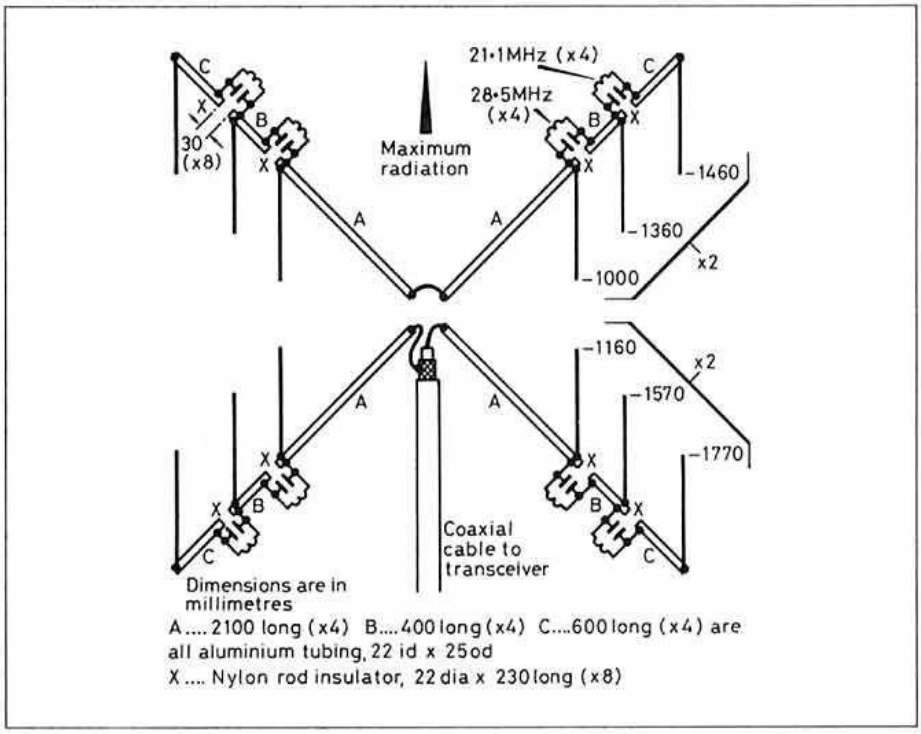

Fig 2: The DJ1FO X-beam for 14, 21 and 28MHz. Good performance from a small turning radius and easy tune-up for the DIY amateur with modest means.

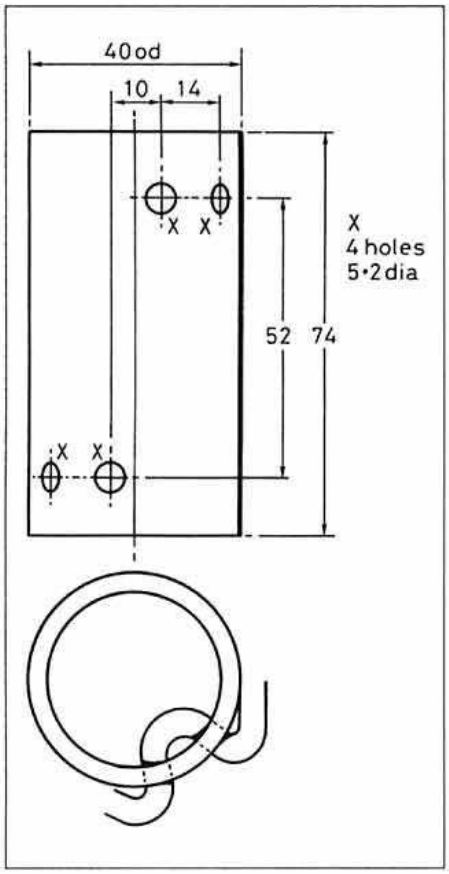

Fig 4: The trap formers are fashioned from plumbers' PVC tubing. One size is used for all traps.

for 21MHz and 300mm for 14MHz. Don't forget the jumper between the director halves! – *G4LQI*).

Support the beam within reach from the ground as far removed from large metal objects as possible. The aim of the procedure is to bring the resonant frequency of the beam, as seen at the terminals where the coax feeder is to be connected, to just above the lower end of the band being adjusted. Subsequent lifting of the beam to its operating height will then raise the resonant frequency to near centre-band.

Adjustment consists of snipping equal bits off all four wires relating to the band being tuned; this preserves the length differential between the radiator and director loading wires.

28MHz tuning comes first, trimming the four innermost loading wires. 21MHz comes next, 14MHz last. (With the extra length of the loading wires, the initial resonances will be well outside each amateur band; *do not* use the transmitter and SWR meter as a resonance indicator. Connect a few turns of wire to the feed point and couple the dip meter to them. Then do the clipping, till resonance occurs just inside the band. Now you can verify your work with the transmitter and SWR meter before repeating the procedure on the next lower band – *G4LQI*).

COMMISSIONING

WHEN FIRST TRIED, the arms of my beam drooped too much; a 1m extension of the stub

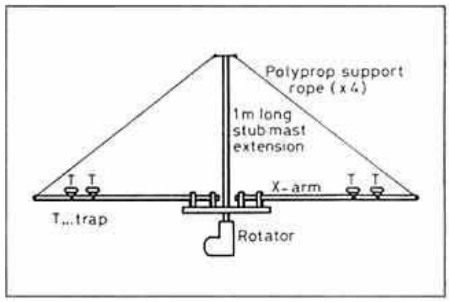

Fig 5: A stub mast extension and polyproylene cords keep the X-arms from drooping.

mast and light polypropylene cords (washline does fine – *G4LQI*) from its top to the tips of the arms solved that, **Fig 5**.

The most difficult part of the job was getting the beam onto the roof. Altogether, the mechanical work took more time than anticipated, but the effort was well rewarded. The final SWR ratios were 1.1:1 on 28 and 21MHz, 1.3:1 on 14MHz.

★ Waterproofing the ends of the coax windings is essential. GW4FRX shows how in *RadCom*, January 1989 and in the *HF Antenna Collection* p184 (RSGB).

SWR ANALYSER

TURN TO page 44 for a review of a very useful device for measuring experimental aerials.

RADCOM Helplines FOR MEMBERS

● Mr M G O'Hanlon, G4GYD, wants a **Weston Standard Cell** (1.0186 volts). If any one can help please contact G4GYD on tel: 0707 325257 or write to him QTHR.

● Ian, GM0UHC (ex GM8LWR) needs a circuit diagram for an **AKI Stereo Amplifier** type AM-2400. Any information to Ian, GM8LWR, QTHR.

● Mike, G4AYO, is seeking the manuals (or a photocopy) for a **Drake 2B Rx and a Drake 2NT Tx** for I2MNL. All expenses reimbursed. Contact Mike on 0742 350434 or write to him QTHR.

● Mr J Hewett, G4SVE, after reading the May 1986 *Technical Topics* entitled 'Optimising Coaxial Traps' by the late Geoff Roberts, G3ENY, needs information regarding the calculation of wire in the outer legs of the dipole given the coil inductance. Also a programme listing giving suggested pipe sizes for the traps. If anyone can help, write to G4SVE who is QTHR.

● Henning, SM0PRY, has a **Standard** VHF/UHF Transceiver model C500 and now needs the address for Standard in the UK, to get an English Instruction Booklet and a new battery case. If anyone has the address of a representative of Standard in the UK, write to Henning Juhlin, SM0PRY at Gribbylundsvagen 77, S-183 67 TABY, Sweden, or tel: 08-756 00 86.

● Mr V E Roberts, G3EGY, wants any information, circuit diagrams, manuals etc on a **Modem, Model AVT – FVT**, made by Bishopsgate Terminals Ltd. Also any information on a Danish made Data System. IDA3270RS. Any information to G3EGY, tel: 0782 324407 or write QTHR.

● Peter, GM4AXS, has a quantity of **spares for a Harris/3M Photocopier model 6215**, which he wishes to give away free, just pay the carriage (Toner unit is heavy!). Anyone interested to contact Peter, GM4AXS on tel: 0631 71442.

● Hugh, G4TMO, is looking for adivce on the feasibility or otherwise of converting a **YAESU FT-70G HF transceiver**, covering 2-30MHz on transmit and 500KHz-30MHz on Receive, to transmitting on the 160 metre band. If you can help, contact Hugh Kemp by tel: 0264 353145.

● Chris, G8JFJ, needs tuning and bandchange knobs for the (1940) **Hallicrafters SX28 'Super Skyrider'** Receiver. Also needs a circuit diagram and a complete set of handbooks for the (1950) **Hallicrafters panadaptor** SP44. Photocopies would be OK. If you are able to help, contact Chris, on 0705 596836.

● Mr N Lowson, GM4XRF, wants circuit diagrams for a **FDK Multi-725X** 144MHz Transceiver. Any information to GM4XRF, tel: 0307 464619 or write QTHR.

● Ken, G4WAS needs a Service/Operating Manuals for **Advance LF Oscillator Type H1E**, and also for **Telequipment Oscilloscope Type D66**. Any information to Ken, G4WAS, write to him at QTHR, or tel: 0922 475057 weekends only.

● John, G0FZW seeks a service, maintenance manual, circuit diagram for a **SHARP SF 750 Photocopier**. Any information appreciated, for originals or copies. All costs will be reimbursed. Contact John by telephoning 0937 583359.

THE 3rd NATIONAL VINTAGE COMMUNICATIONS FAIR
(ENTRY £3 PRICE)
NEC • Birmingham
15 MAY 1994
10.30am - 5pm
Stalls only £25

250+ stalls selling . . . .
• VINTAGE RADIOS • 405-LINE TV
• PHONECARDS • TELEPHONES
• GRAMOPHONES • RECORDS & CDs
• VINTAGE AUDIO/HI-FI
• JUKEBOXES • FILM/CINEMA etc.
• plus COLLECTORS' CLUBS & SPECIALIST MAGAZINES

Stall bookings:
J.Hill, NVCF'94,
2-4 Brook Street,
Bampton,
Devon.