600W Single Output with PFC Function

HRP-600 series



Features :

- Universal AC input / Full range
- Built-in active PFC function, PF>0.94
- High efficiency up to 89%
- Withstand 300VAC surge input for 5 seconds
- Protections: Short circuit / Overload / Over voltage / Over temperature
- Built-in constant current limiting circuit
- Built-in cooling fan ON-OFF control
- Built-in DC OK signal
- Built-in remote sense function
- All using 105℃ long life electrolytic capacitors

SPECIFICATION

MODEL		HRP-600-3.3	HRP-600-5	HRP-600-7.5	HRP-600-12	HRP-600-15	HRP-600-24	HRP-600-36	HRP-600-48
OUTPUT	DC VOLTAGE	3.3V	5V	7.5V	12V	15V	24V	36V	48V
	RATED CURRENT	120A	120A	80A	53A	43A	27A	17.5A	13A
	CURRENT RANGE	0 ~ 120A	0 ~ 120A	0 ~ 80A	0 ~ 53A	0 ~ 43A	0 ~ 27A	0 ~ 17.5A	0 ~ 13A
	RATED POWER	396W	600W	600W	636W	645W	648W	630W	624W
	RIPPLE & NOISE (max.) Note.2	100mVp-p	100mVp-p	100mVp-p	120mVp-p	150mVp-p	150mVp-p	200mVp-p	240mVp-p
	VOLTAGE ADJ. RANGE	2.8 ~ 3.8V	4.3 ~ 5.8V	6.8 ~ 9V	10.2 ~ 13.8V	13.5 ~ 18V	21.6 ~ 28.8V	28.8 ~ 39.6V	40.8 ~ 55.2V
	VOLTAGE TOLERANCE Note.3	±2.0%	±2.0%	±2.0%	±1.0%	±1.0%	±1.0%	±1.0%	±1.0%
	LINE REGULATION	±0.5%	±0.5%	±0.5%	±0.3%	±0.3%	±0.2%	±0.2%	±0.2%
	LOAD REGULATION	±1.0%	±1.0%	±1.0%	±0.5%	±0.5%	±0.5%	±0.5%	±0.5%
	SETUP, RISE TIME	1000ms, 50ms/230VAC 2500ms, 50ms/115VAC at full load							
	HOLD UP TIME (Typ.)	16ms/230VAC 16ms/115VAC at full load							
INPUT	VOLTAGE RANGE Note.5	85 ~ 264VAC 120 ~ 370VDC							
	FREQUENCY RANGE	47 ~ 63Hz							
	POWER FACTOR (Typ.)	PF>0.94/230VAC PF>0.99/115VAC at full load							
	EFFICIENCY (Typ.)	78.5%	82%	87%	88%	88%	88%	89%	89%
	AC CURRENT (Typ.)	8.5A/115VAC 5A/230VAC							
	INRUSH CURRENT (Typ.)	35A/115VAC 70A/230VAC							
	LEAKAGE CURRENT	<1.2mA / 240VAC							
PROTECTION	OVERLOAD	105 ~ 135% rated output power							
		Protection type : Constant current limiting, recovers automatically after fault condition is removed							
	OVER VOLTAGE	3.96 ~ 4.62V	6 ~ 7V	9.4 ~ 10.9V	14.4 ~ 16.8V	18.8 ~ 21.8V	30 ~ 34.8V	41.4 ~ 48.6V	57.6 ~ 67.2V
		Protection type : Shut down o/p voltage, re-power on to recover							
	OVER TEMPERATURE	80℃ ±5℃ (TSW1)detect on heatsink of power transistor							
		90℃ ±5℃ (TSW2) detect on heatsink of power doide for 3.3V,5V,7.5V ; 100℃ ±5℃ (TSW2) detect on main power output choke for others							
		Protection type : Shut down o/p voltage, recovers automatically after temperature goes down							
FUNCTION	DC OK SIGNAL	PSU turn on : 3.3 ~ 5.6V ; PSU turn off : 0 ~ 1V							
	FAN CONTROL (Typ.)	Load 35±15% or RTH2≧50℃ Fan on							
ENVIRONMENT	WORKING TEMP.	-40 ~ +70℃ (Refer to "Derating Curve")							
	WORKING HUMIDITY	20 ~ 90% RH non-condensing							
	STORAGE TEMP., HUMIDITY	-40 ~ +85℃, 10 ~ 95% RH							
	TEMP. COEFFICIENT	±0.03%/℃ (0 ~ 50℃)							
	VIBRATION	10 ~ 500Hz, 5G 10min./1cycle, 60min. each along X, Y, Z axes							
SAFETY & EMC (Note 4)	SAFETY STANDARDS	UL60950-1, TUV EN60950-1 approved							
	WITHSTAND VOLTAGE	I/P-O/P:3KVAC I/P-FG:1.5KVAC O/P-FG:0.5KVAC							
	ISOLATION RESISTANCE	I/P-O/P, I/P-FG, O/P-FG:100M Ohms / 500VDC / 25℃/ 70% RH							
	EMC EMISSION	Compliance to EN55022 (CISPR22) Class B, EN61000-3-2,-3							
	EMC IMMUNITY	Compliance to EN61000-4-2,3,4,5,6,8,11, EN55024, EN61000-6-2, heavy industry level, criteria A							
OTHERS	MTBF	140.6K hrs min. MIL-HDBK-217F (25℃)							
	DIMENSION	218*105*63.5mm (L*W*H)							
	PACKING	1.5Kg;8pcs/13Kg/1.34CUFT							

NOTE

1. All parameters NOT specially mentioned are measured at 230VAC input, rated load and 25℃ of ambient temperature.
2. Ripple & noise are measured at 20MHz of bandwidth by using a 12" twisted pair-wire terminated with a 0.1uf & 47uf parallel capacitor.
3. Tolerance : includes set up tolerance, line regulation and load regulation.
4. The power supply is considered a component which will be installed into a final equipment. The final equipment must be re-confirmed that it still meets EMC directives. For guidance on how to perform these EMC tests, please refer to "EMI testing of component power supplies." (as available on http://www.meanwell.com)
5. Derating may be needed under low input voltages. Please check the derating curve for more details.

■ Mechanical Specification

Case No. 977A Unit:mm

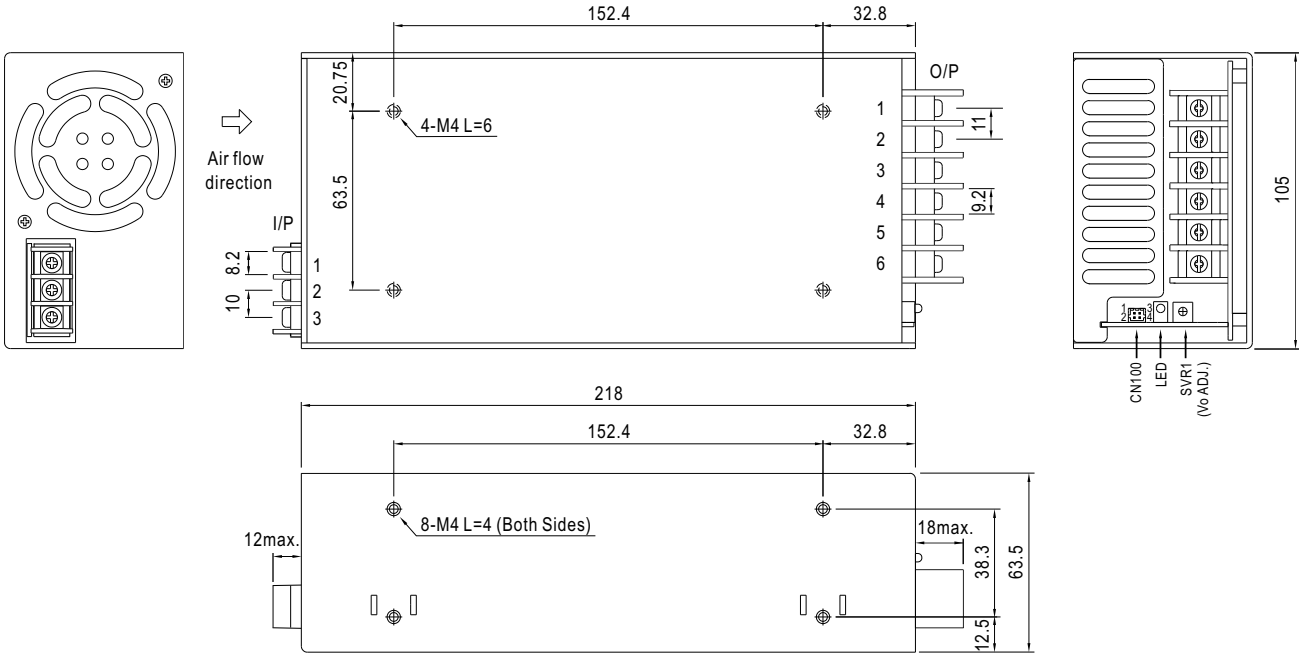

AC Input Terminal Pin No. Assignment

Pin No.	Assignment
1	AC/L
2	AC/N
3	FG ⏚

DC Output Terminal Pin No. Assignment

Pin No.	Assignment
1~3	-V
4~6	+V

Connector Pin No. Assignment(CN100) : HRS DF11-4DP-2DS or equivalent

Pin No.	Assignment	Mating Housing	Terminal
1	DC-OK	HRS DF11-4DS or equivalent	HRS DF11-**SC or equivalent
2	GND		
3	+S		
4	-S		

■ Block Diagram

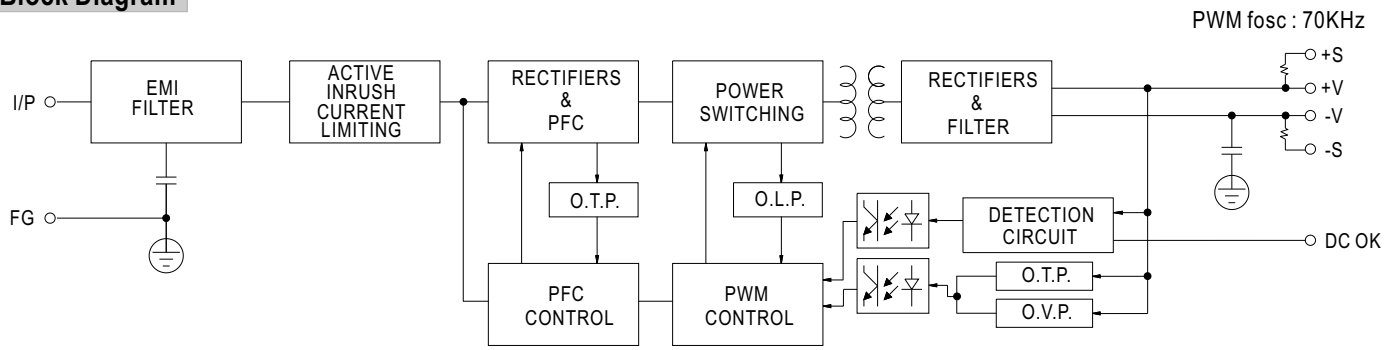

■ Derating Curve

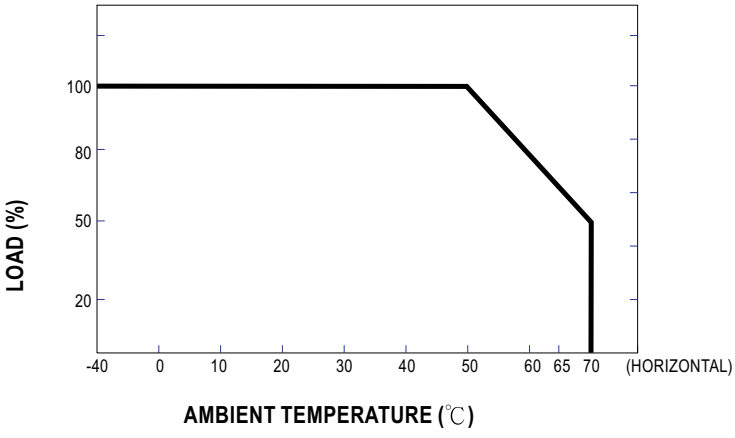

■ Output Derating VS Input Voltage

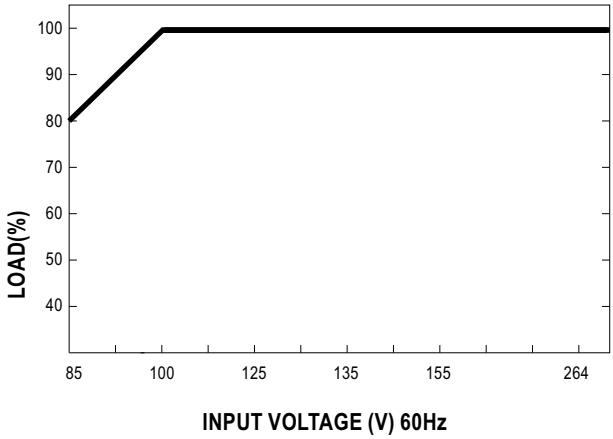

Mouser Electronics

Authorized Distributor

Click to View Pricing, Inventory, Delivery & Lifecycle Information:

MEAN WELL:

HRP-600-12 HRP-600-15 HRP-600-24 HRP-600-3.3 HRP-600-36 HRP-600-48 HRP-600-5 HRP-600-7.5 HRP-600-24CC