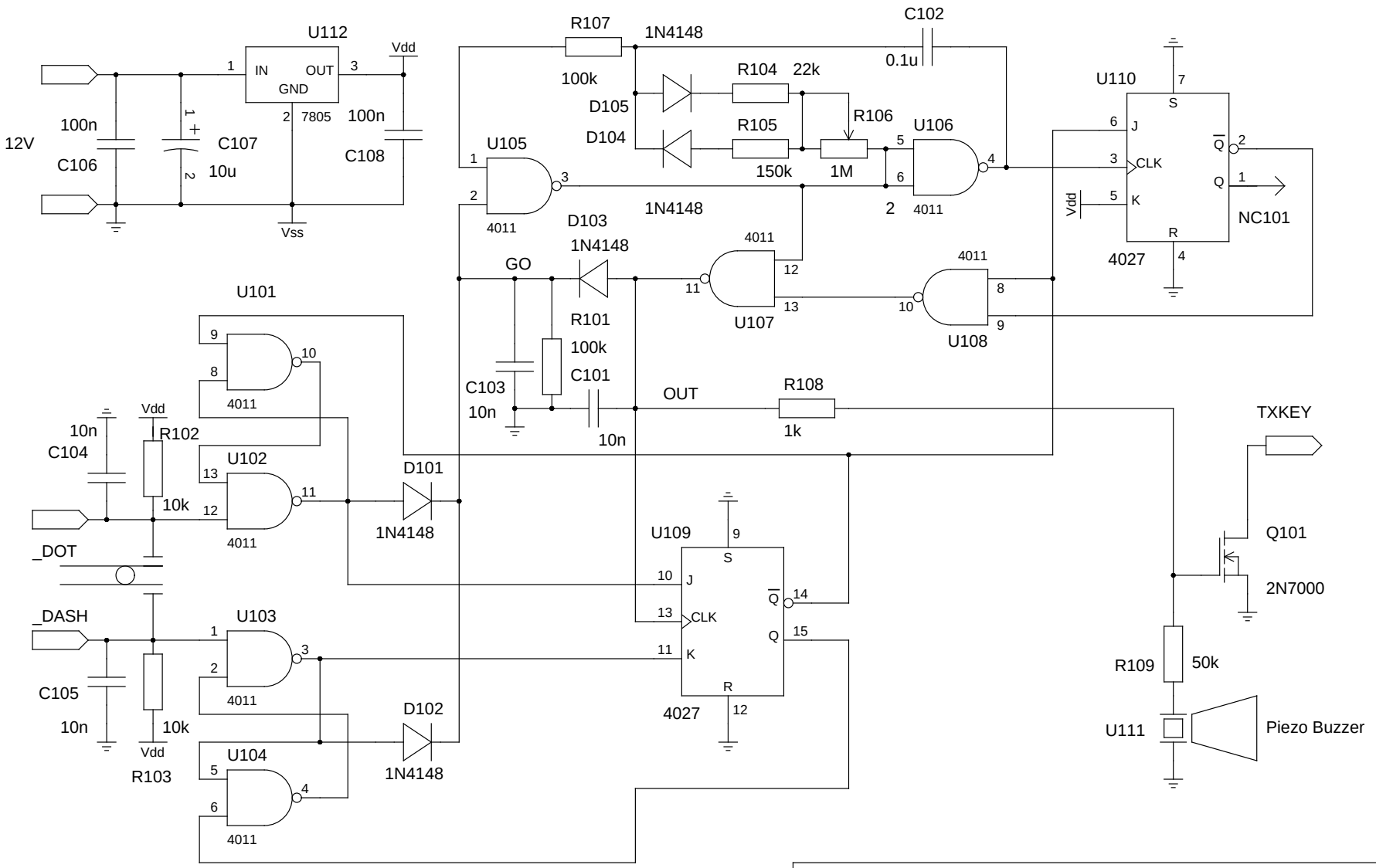

TITLE	Iambic_not_A_mode CMOS Morse keyer with bit memory and automatic weighting
FILE:	REVISION: 29.06.2017.
PAGE OF	DRAWN BY: 9a3ig