Scraped USB−RS232 adapter onboard

USB Prolific Tech. Inc. DB9M

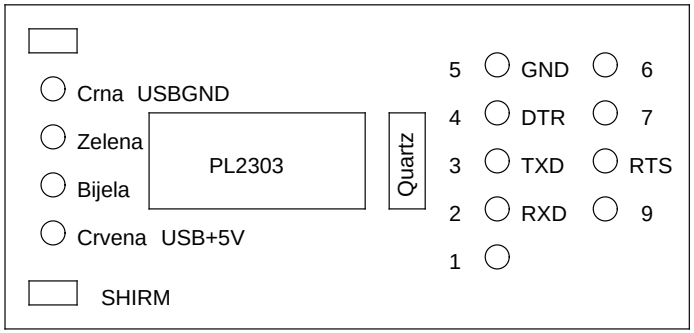

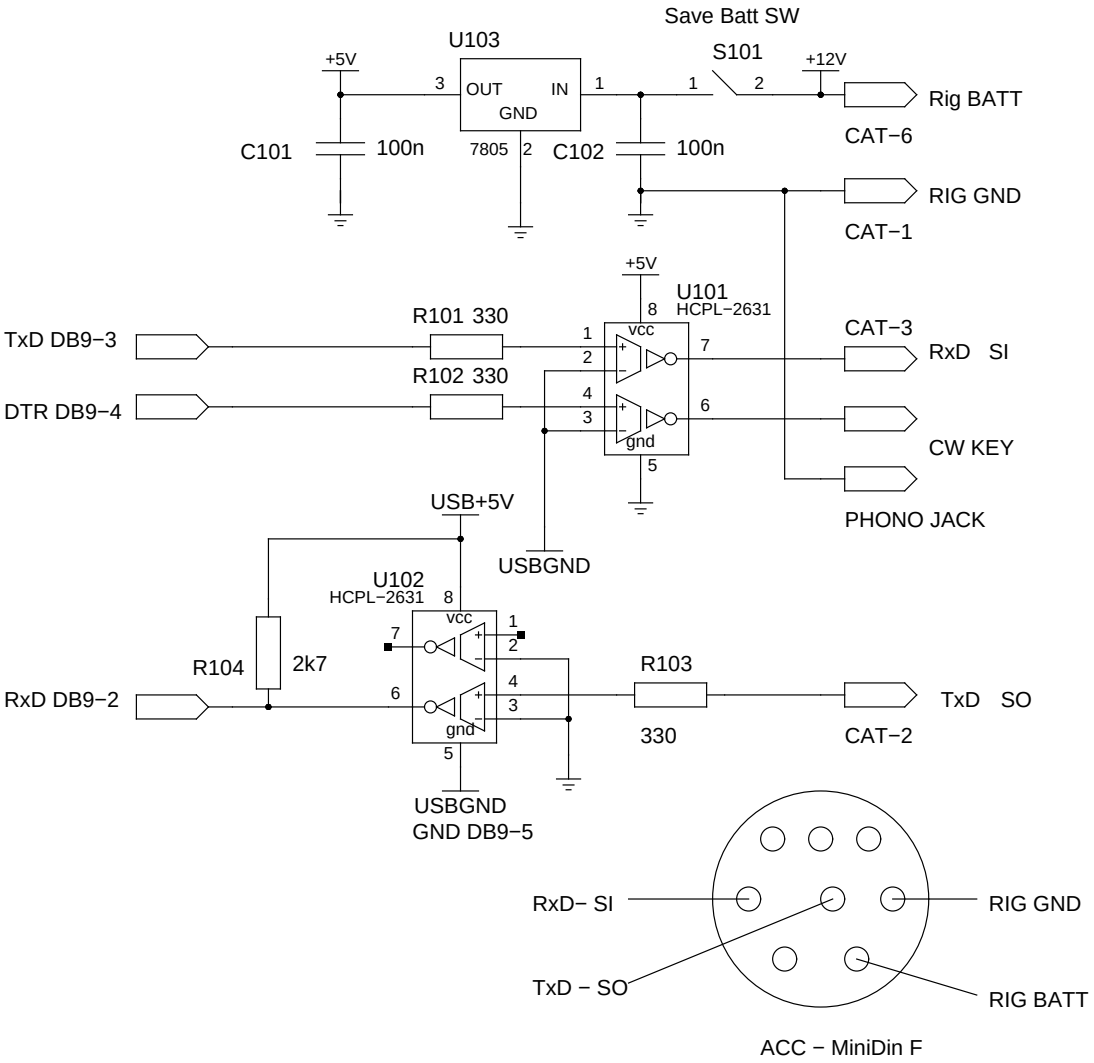

ACC − MiniDin F

TITLE High speed opto CAT	
FILE:	REVISION: 29.06.2016
PAGE OF	DRAWN BY: 9a3ig