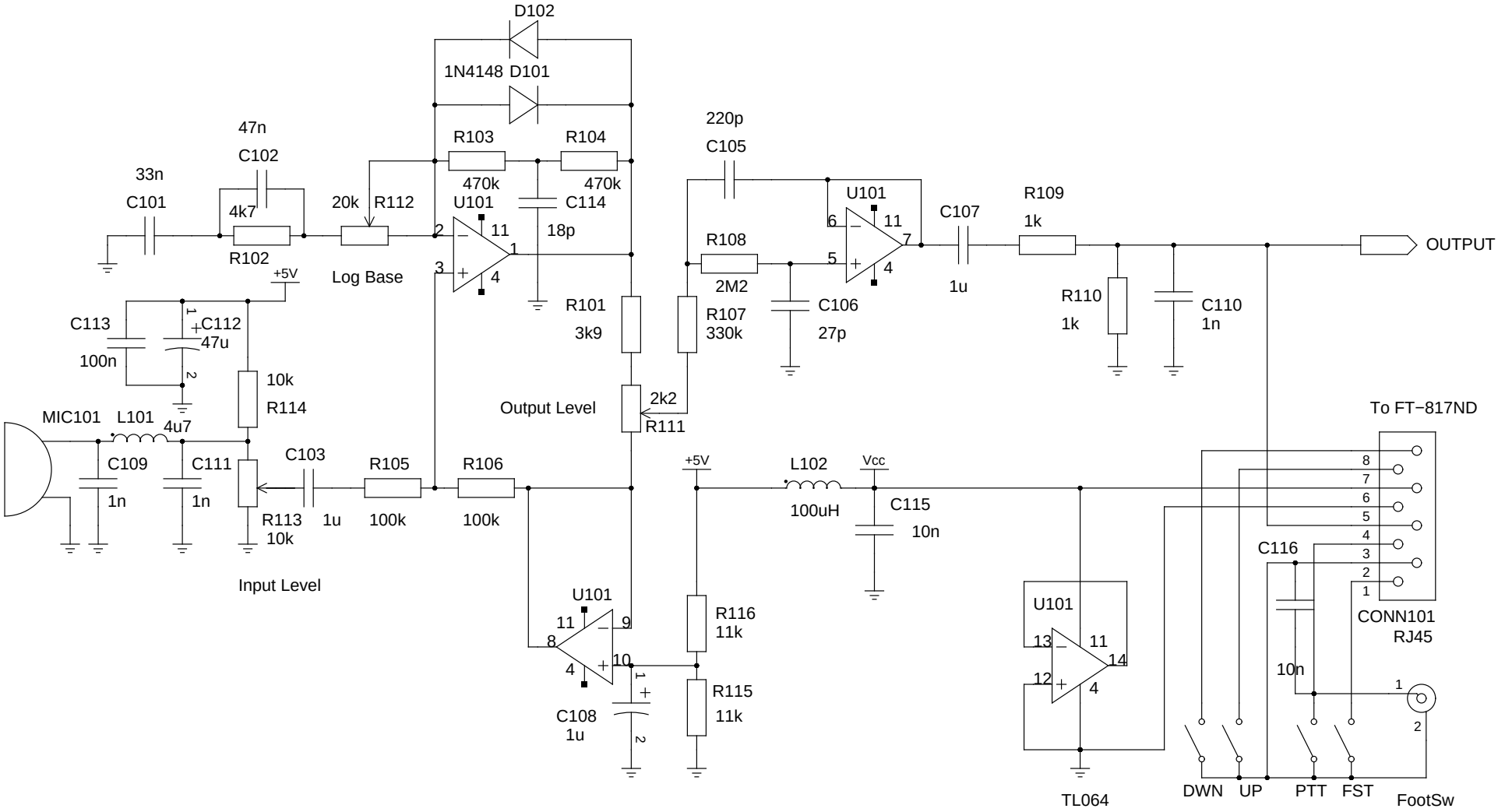

TITLE Electret Microphone Quasi−Log Amp	
FILE:	REVISION: 6.04.2017.
PAGE OF	DRAWN BY: 9a3ig